CAPACITOR (i-ELOOP) [i-ELOOP]

id131704502000

Purpose, Function

- The capacitor (i-ELOOP) is a storage battery (electric double layer capacitor) which stores electric power by deceleration generation energy. In conjunction with the variable voltage type generator which can generate a maximum of 24.3 V, the capacitor (i-ELOOP) is also charged efficiently by the generated power in a short period of time.
- The capacitor (i-ELOOP) charges/discharges by physical reactions which is different from a battery where it takes place by chemical reactions. Therefore, large amounts of electricity can be charged/discharged quickly and the deterioration rate is extremely low even if it is used for a long period.

Construction

- The capacitor (i-ELOOP) is located behind the front mudguard No.2 (LH).

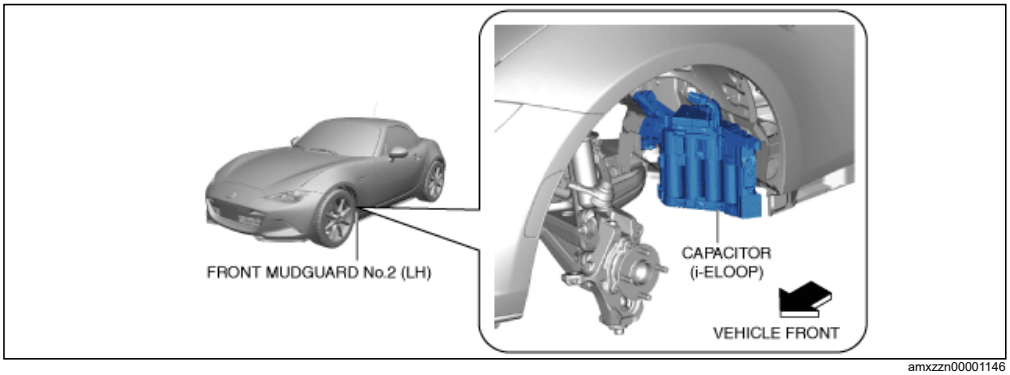

amxzzn00001146

- The capacitor (i-ELOOP) connects a series of nine capacitors with 2.7 V per cell. The voltage with the capacitor (i-ELOOP) fully charged is 24.3 V.
- The capacitor (i-ELOOP) consists of the following parts.

Part name	Purpose
Service plug	Interrupts short-circuit current to prevent a short to the 24.3 V related electricity stored in the capacitor (i-ELOOP) during servicing and the flow of large amounts of current.
Temperature sensor	Detects the capacitor (i-ELOOP) temperature for the purpose of assuring capacitor (i-ELOOP) performance because capacitor (i-ELOOP) performance deterioration is caused by a continuous capacitor (i-ELOOP) high temperature.
Capacitor (i-ELOOP) relay	Switches the electric circuit when the ignition is switched off, when in pre-charge mode for i-ELOOP operation, if the vehicle is in a collision, and when it is in fail-safe.
Plug (for compulsory discharge)	Equipped to the resistor on the capacitor (i-ELOOP) so that it can be disposed of after discharging the capacitor (i-ELOOP) for the purpose of assuring safety. The capacitor (i-ELOOP) can be transported safety by the compulsory discharge of the capacitor (i-ELOOP) using the resistor.
LED	Turns on the LED during compulsory capacitor (i-ELOOP) discharging.

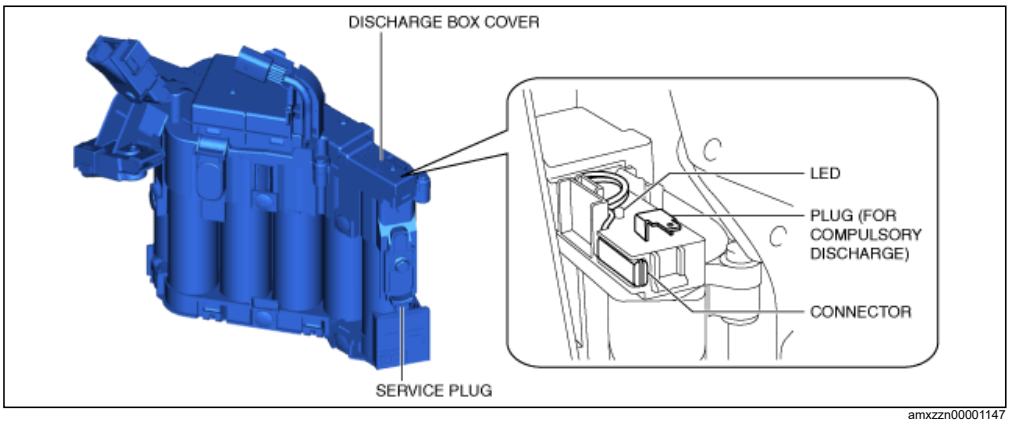

amxzzn00001147

- The capacitor (i-ELOOP) input/output terminals are as follows.

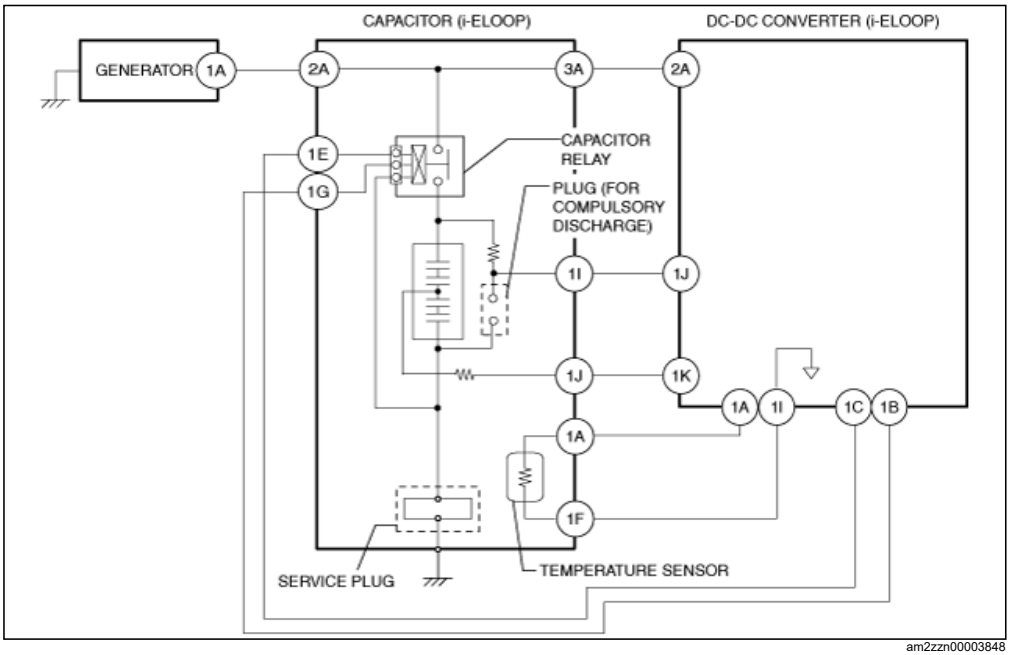

am2zzn00003848

Terminal signal	Input/output
2A	Power input from generator.
3A	Electricity output to DC-DC converter (i-ELOOP).
1A	Temperature sensor signal output to DC-DC converter (i-ELOOP).
1E	Electricity output to DC-DC converter (i-ELOOP).
1F	GND (Temperature sensor)
1G	Electricity output to DC-DC converter (i-ELOOP).
1I	Electricity input/output to DC-DC converter (i-ELOOP).
1J	Electricity input/output to DC-DC converter (i-ELOOP).

Operation

Capacitor (i-ELOOP) power

- The capacitor (i-ELOOP) can be fully charged in approx. 7—10 s depending on the capacitor (i-ELOOP) voltage or vehicle conditions when decelerating from a speed of 40 km/h {25 mph} or more.
- If the capacitor (i-ELOOP) voltage is lower than the battery voltage, power cannot be supplied to the vehicle's electrical devices. Therefore, the actual capacitor (i-ELOOP) voltage that can be used is the voltage approaching the battery voltage.
- The time in which power can be supplied to the vehicle's electrical devices after the capacitor (i-ELOOP) is fully-charged, changes depending on the vehicle's electric load.

Ex.) Capacitor (i-ELOOP) voltage and power supply time relation

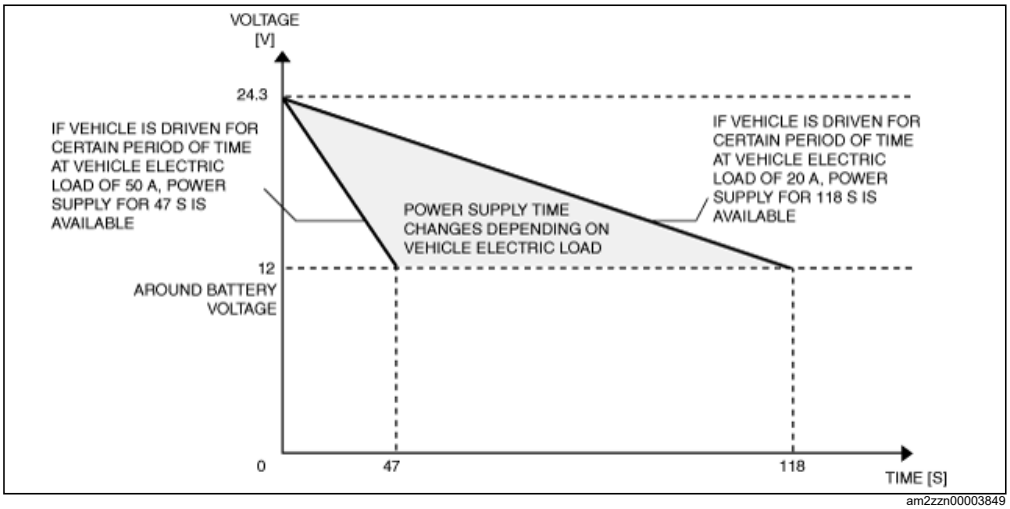

am2zzn00003849

Capacitor (i-ELOOP) charge/discharge principles

- The capacitor (i-ELOOP) stores electricity using an electric double layer*2 instead of a dielectric*1 consisting of a condenser.

Charging

— The electrolyte consists of cations and anions, and when the battery is connected, the anions are attracted to the positive electrode of the activated carbon and the cations are attracted to the negative electrode, and each charge layer (electric double layer) is formed on the surfaces where the electrode and the electrolyte contact. Ions are absorbed physically on the electrode surface of the activated carbon by attracting electrical charge in the activated carbon and the ions in the electrolyte, and electricity can be stored even without chemical reactions.

Discharging

— When the resistor (load) is installed, current flows by separating ions from the activated carbon (electrode). Ions are diffused to the electrolyte because the electrical charge in the activated carbon (electrode) is lost through discharging.

*1 :Material which effects electric polarization
*2 :The extremely-short distance between the boundaries of the activated carbon (electrode) and electrolyte is separated, and the positive charge/negative charges are arranged oppositely.

Note

- The condenser capacity used for the general electrical circuit is several picofarad to tens of thousands of microfarad. However, a high-capacity electrical double layer capacitor (i-ELOOP) of several F to 200 F can be stored.
- A lead battery or lithium-ion battery stores electricity using chemical reactions. However, because the capacitor (i-ELOOP) stores electricity by physical phenomenon and the electrode deterioration is extremely low, it has an excellent service life.

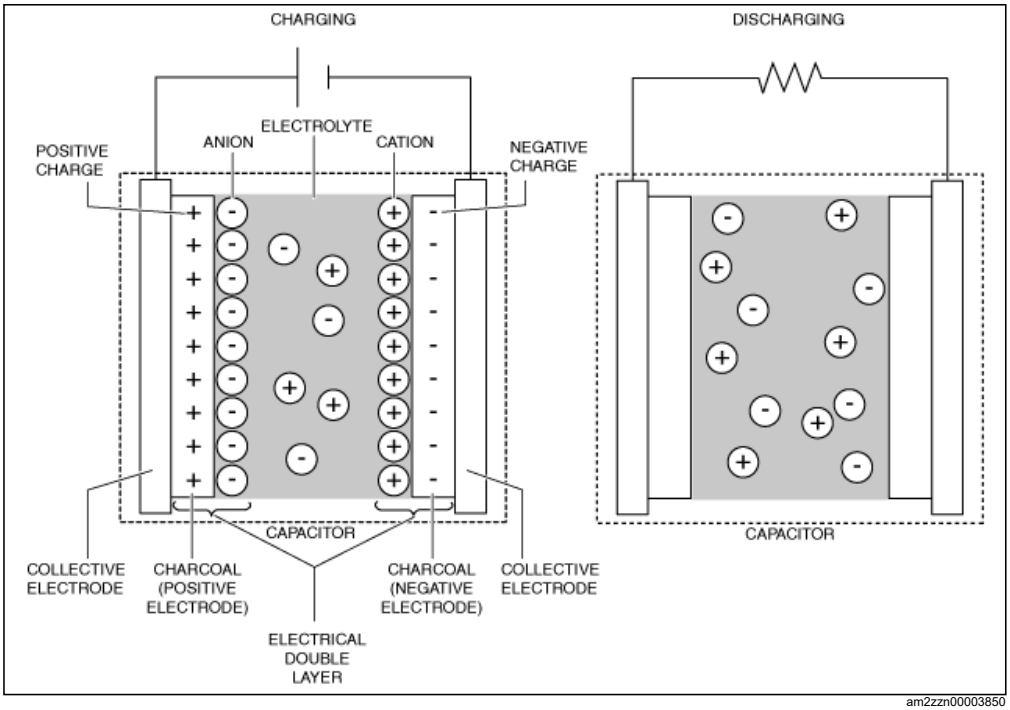

am2zzn00003850

Capacitor (i-ELOOP) relay operation

- The capacitor (i-ELOOP) relay switching is controlled by the DC-DC converter (i-ELOOP).
- The capacitor (i-ELOOP) relay disconnects the capacitor (i-ELOOP) power from the vehicle according to the vehicle conditions for the following purposes.

When capacitor (i-ELOOP) relay is disconnected	Outline
Ignition is switched off	• To prevent a short to the 24.3 V related power or to reduce back-up current during servicing, the capacitor (i-ELOOP) relay is disconnected approx. 30 s after the ignition is switched OFF. **Note** • By switching off (open) the bypass relay in the DC-DC converter (i-ELOOP) at the same time the capacitor (i-ELOOP) relay is disconnected, the power supply is put in a condition in which it cannot be supplied to the vehicle from the capacitor (i-ELOOP).
During collision	• The capacitor (i-ELOOP) relay is disconnected to assure safety in a vehicle collision. **Note** • The DC-DC converter (i-ELOOP) detects a collision signal from the SAS control module and sends a generator output stop request signal to the PCM. In addition, power cannot be supplied to the vehicle from the capacitor (i-ELOOP) by stopping the voltage reduction circuit in the DC-DC converter (i-ELOOP) and turning the bypass relay off (open) at the same time the capacitor (i-ELOOP) replay is disconnected. • This condition can be cancelled by switching the ignition OFF.
In pre-charge mode for i-ELOOP operation	• The capacitor (i-ELOOP) relay is disconnected to assure excitation current to the generator when power from the battery is used (in pre-charge mode for i-ELOOP operation).
In fail-safe	• The capacitor (i-ELOOP) relay is disconnected while in fail-safe.

- For details on the capacitor (i-ELOOP) relay operation, refer to the [i-ELOOP]. (See i-ELOOP [i-ELOOP].)

Fail-safe

DC-DC converter (i-ELOOP)

DTC	Fail-safe
P0A12:00	• Inhibits engine-stop by operating the i-stop function. (With i-stop)
P1794:00 P1794:01 P1794:13 P1794:14 P1794:1B P1794:49	• Inhibits engine-stop by operating the i-stop function. • Inhibits the i-ELOOP control. • Switches to bypass mode which shuts the capacitor (i-ELOOP) off.
P1794:11	• Inhibits engine-stop by operating the i-stop function. • Inhibits the i-ELOOP control. • Inhibits the pre-charge control. • Switches to bypass mode which shuts the capacitor (i-ELOOP) off.

PCM

DTC	Fail-safe
P2502:00	• Inhibits engine-stop by operating the i-stop function. • Generator switch to default mode requested (14.5 V constant voltage power generation). • Transition to i-ELOOP bypass mode.
P2504:00	• Inhibits engine-stop by operating the i-stop function. • Generator switch to default mode requested. If the temperature of the generator exceeds the specified value, the generator itself stops power generation. But, if the internal circuit of the generator is malfunctioning, the generator may not accept the demand from the PCM.